LOW PIM ADAPTERS

- Solid Construction
- Same Day Shipping
- RoHS Compliant
- Wide Connector Selection





Sold Exclusively by RFMW, Ltd.

www.rfmw.com

P1dB

www.p1db.com

P1LP-ADP-716J/716J

7/16 Female to 7/16 Female, DC-6 GHz Low PIM Adapter

Description

7/16 Female to 7/16 Female, DC-6 GHz Low PIM Adapter. Each adapter has a passivated stainless steel body with silver plated phosphorus bronze center conductors. No soldering or crimping is required.



Specifications

Connector 1 Type	7/16
Connector 1 Gender	Female
Connector 1 inner conductor/plating material	Silver plated Phos. Bronze
Connector 1 Body Plating Material	Passivated Stainless Steel
Connector 1 Mount Method	None
Connector 1 Hex Size, in./mm	1.26/32
Connector 2 Type	7/16
Connector 2 Gender	Female
Connector 2 inner conductor/plating material	Silver plated Phos. Bronze
Connector 2 Body Plating Material	Passivated Stainless Steel
Connector 2 Mount Method	None
Connector 2 Hex Size, in./mm	1.26/32
Body Style	Straight
Start Frequency (GHz)	DC
Stop Frequency (GHz)	6
Maximum Insertion Loss (dB)	0.5
Passive Intermodulation (dBc)	LT -168
Impedance (Ohms)	50
Max. VSWR	1.20:1
Max. Operating Volts	500
Operating temp, ° C	-65° to +125°
Length in.[mm]	1.154" [29.3]
Width in.[mm]	1.140" [29.0]
Weight, oz., [grams]	2.0, [56.68]
Dielectric Type	PTFE
Torque, in. lbs.	12
RoHS Compliant	Yes
REACH Compliant	Yes

© 2013 P1dB, Ltd. All rights reserved I www.p1db.com/adapters

P1LP-ADP-716J/716J

7/16 Female to 7/16 Female, DC-6 GHz Low PIM Adapter

Mechanical Outline Drawing

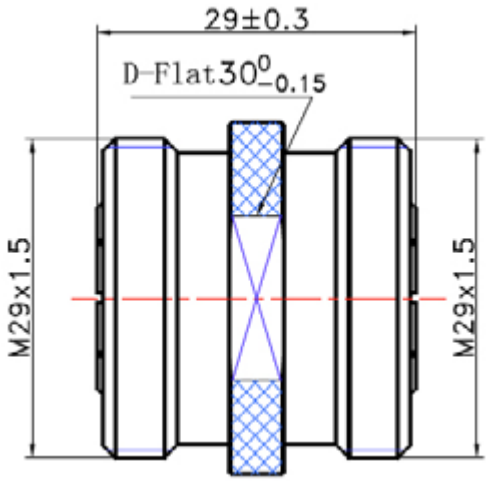

Dimensions in millimeters

P1dB, Ltd.
188 Martinvale Ave
San Jose, CA 95119
(408) 414-1450 ph
(408) 414-1461 fax
sales@p1dB.com

Scan this QR code with your smartphone

P1LP-ADP-716J/716P

7/16 Female to 7/16 Male, DC-6 GHz Low PIM Adapter

Description

7/16 Female to 7/16 Male, DC-6 GHz Low PIM Adapter. Each adapter has a passivated stainless steel body with silver plated phosphorus bronze center conductors. No soldering or crimping is required.

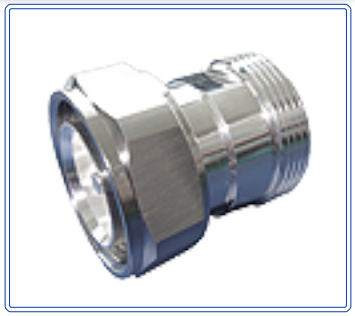

Specifications

Connector 1 Type	7/16
Connector 1 Gender	Female
Connector 1 inner conductor/plating material	Silver plated Phos. Bronze
Connector 1 Body Plating Material	Passivated Stainless Steel
Connector 1 Mount Method	None
Connector 1 Hex Size, in./mm	1.26/32
Connector 2 Type	7/16
Connector 2 Gender	Male
Connector 2 inner conductor/plating material	Silver plated Phos. Bronze
Connector 2 Body Plating Material	Passivated Stainless Steel
Connector 2 Mount Method	None
Connector 2 Hex Size, in./mm	1.26/32
Body Style	Straight
Start Frequency (GHz)	DC
Stop Frequency (GHz)	6
Maximum Insertion Loss (dB)	0.5
Passive Intermodulation (dBc)	LT -168
Impedance (Ohms)	50
Max. VSWR	1.20:1
Max. Operating Volts	500
Operating temp, ° C	-65° to +125°
Length in.[mm]	1.662" [41.2]
Width in.[mm]	1.140" [29.0]
Weight, oz., [grams]	2.0, [56.68]
Dielectric Type	PTFE
Torque, in. lbs.	12
RoHS Compliant	Yes
REACH Compliant	Yes

© 2013 P1dB, Ltd. All rights reserved | www.p1db.com/adapters

P1LP-ADP-716J/716P

7/16 Female to 7/16 Male, DC-6 GHz Low PIM Adapter

Mechanical Outline Drawing

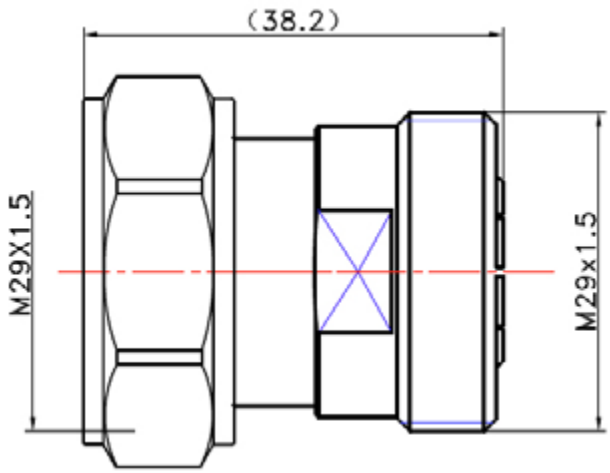

Dimensions in millimeters

P1dB, Ltd.
188 Martinvale Ave
San Jose, CA 95119
(408) 414-1450 ph
(408) 414-1461 fax
sales@p1dB.com

Scan this QR code with your smartphone

P1LP-ADP-716J/NJ

7/16 Female to N-type Female, DC-6 GHz Low PIM Adapter

Description

7/16 Female to N-type Female, DC-6 GHz Low PIM Adapter. Each adapter has a passivated stainless steel body with silver plated phosphorus bronze center conductors. No soldering or crimping is required.

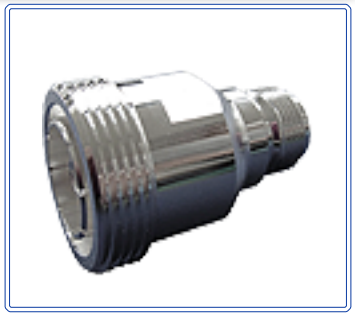

Specifications

Connector 1 Type	7/16
Connector 1 Gender	Female
Connector 1 inner conductor/plating material	Silver plated Be-Cu/Phos. Bronze
Connector 1 Body Plating Material	Silver plated Be-Cu/Phos. Bronze
Connector 1 Mount Method	None
Connector 1 Hex Size, in./mm	1.26/32
Connector 2 Type	N-type
Connector 2 Gender	Female
Connector 2 inner conductor/plating material	Silver plated Phos. Bronze
Connector 2 Body Plating Material	Silver/Trimetal plated Brass
Connector 2 Mount Method	None
Connector 2 Hex Size, in./mm	1.26/32
Body Style	Straight
Start Frequency (GHz)	DC
Stop Frequency (GHz)	6
Maximum Insertion Loss (dB)	0.5
Passive Intermodulation (dBc)	LT -168
Impedance (Ohms)	50
Max. VSWR	1.20:1
Max. Operating Volts	500
Operating temp, ° C	-65° to +125°
Length in.[mm]	1.72" [43.7]
Width in.[mm]	1.140" [29.0]
Weight, oz., [grams]	2.0, [56.68]
Dielectric Type	PTFE
Torque, in. lbs.	12
RoHS Compliant	Yes
REACH Compliant	Yes

© 2013 P1dB, Ltd. All rights reserved | www.p1db.com/adapters

P1LP-ADP-716J/NJ

7/16 Female to N-type Female, DC-6 GHz Low PIM Adapter

Mechanical Outline Drawing

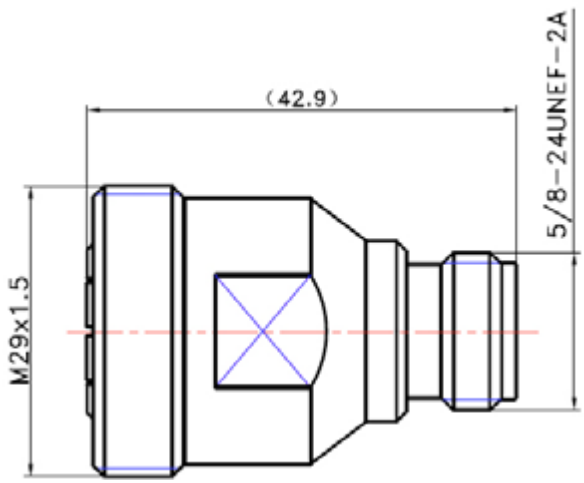

Dimensions in millimeters

P1dB, Ltd.
188 Martinvale Ave
San Jose, CA 95119
(408) 414-1450 ph
(408) 414-1461 fax
sales@p1dB.com

Scan this QR code with your smartphone

P1LP-ADP-716J/NP

7/16 Female to N-type Male, DC-6 GHz Low PIM Adapter

Description

7/16 Female to N-type Male, DC-6 GHz Low PIM Adapter. Each adapter has a passivated stainless steel body with silver plated phosphorus bronze center conductors. No soldering or crimping is required.



Specifications

Connector 1 Type	7/16
Connector 1 Gender	Female
Connector 1 inner conductor/plating material	Silver plated Be-Cu/Phos. Bronze
Connector 1 Body Plating Material	Silver plated Phos. Bronze
Connector 1 Mount Method	None
Connector 1 Hex Size, in./mm	1.26/32
Connector 2 Type	N-type
Connector 2 Gender	Male
Connector 2 inner conductor/plating material	Silver plated Phos. Bronze
Connector 2 Body Plating Material	Silver/Trimetal plated Brass
Connector 2 Mount Method	None
Connector 2 Hex Size, in./mm	19
Body Style	Straight
Start Frequency (GHz)	DC
Stop Frequency (GHz)	6
Maximum Insertion Loss (dB)	0.5
Passive Intermodulation (dBc)	LT -168
Impedance (Ohms)	50
Max. VSWR	1.20:1
Max. Operating Volts	500
Operating temp, ° C	-65° to +125°
Length in.[mm]	1.72" [43.7]
Width in.[mm]	1.140" [29.0]
Weight, oz., [grams]	2.0, [56.68]
Dielectric Type	PTFE
Torque, in. lbs.	12
RoHS Compliant	Yes
REACH Compliant	Yes

© 2013 P1dB, Ltd. All rights reserved I www.p1db.com/adapters

P1LP-ADP-716J/NP

7/16 Female to N-type Male, DC-6 GHz Low PIM Adapter

Mechanical Outline Drawing

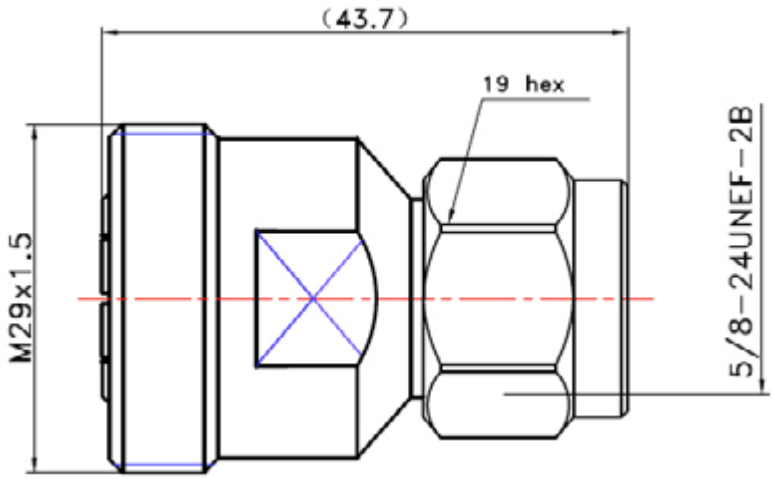

Dimensions in millimeters

P1dB, Ltd.
188 Martinvale Ave
San Jose, CA 95119
(408) 414-1450 ph
(408) 414-1461 fax
sales@p1dB.com

Scan this QR code with your smartphone

P1LP-ADP-716J/SMAJ

7/16 Female to SMA Female, DC-6 GHz Low PIM Adapter

Description

7/16 Female to SMA Female, DC-6 GHz Low PIM Adapter. Each adapter has a passivated stainless steel body with silver plated phosphorus bronze center conductors. No soldering or crimping is required.



Specifications

Connector 1 Type	7/16
Connector 1 Gender	Female
Connector 1 inner conductor/plating material	Silver plated Be-Cu
Connector 1 Body Plating Material	Silver plated Phos. Bronze
Connector 1 Mount Method	None
Connector 1 Hex Size, in./mm	1.26/32
Connector 2 Type	SMA
Connector 2 Gender	Female
Connector 2 inner conductor/plating material	Silver plated Phos. Bronze
Connector 2 Body Plating Material	Silver plated Phos. Bronze
Connector 2 Mount Method	None
Connector 2 Hex Size, in./mm	0.31/8
Body Style	Straight
Start Frequency (GHz)	DC
Stop Frequency (GHz)	6
Maximum Insertion Loss (dB)	0.5
Passive Intermodulation (dBc)	LT -160
Impedance (Ohms)	50
Max. VSWR	1.20:1
Max. Operating Volts	500
Operating temp, ° C	-65° to +125°
Length in.[mm]	1.20" [30.5]
Width in.[mm]	1.140" [29.0]
Weight, oz., [grams]	2.0, [56.68]
Dielectric Type	PTFE
Torque, in. lbs.	12
RoHS Compliant	Yes
REACH Compliant	Yes

© 2013 P1dB, Ltd. All rights reserved | www.p1db.com/adapters

P1LP-ADP-716J/SMAJ

7/16 Female to SMA Female, DC-6 GHz Low PIM Adapter

Mechanical Outline Drawing

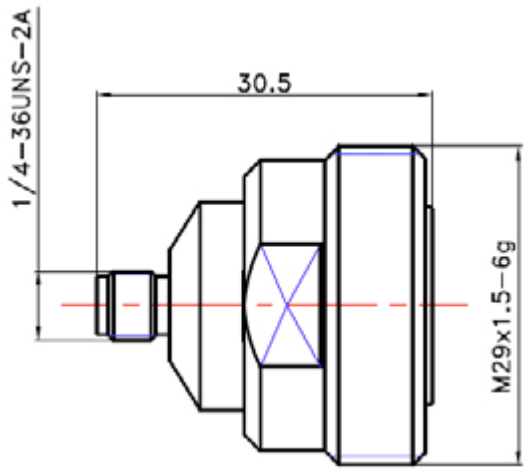

Dimensions in millimeters

P1dB, Ltd.
188 Martinvale Ave
San Jose, CA 95119
(408) 414-1450 ph
(408) 414-1461 fax
sales@p1dB.com

Scan this QR code with your smartphone

P1LP-ADP-716J/SMAP

7/16 Female to SMA Male, DC-6 GHz Low PIM Adapter

Description

7/16 Female to SMA Male, DC-6 GHz Low PIM Adapter. Each adapter has a passivated stainless steel body with silver plated phosphorus bronze center conductors. No soldering or crimping is required.

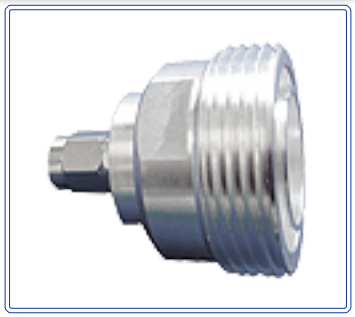

Specifications

Connector 1 Type	7/16
Connector 1 Gender	Female
Connector 1 inner conductor/plating material	Silver plated Be-Cu
Connector 1 Body Plating Material	Silver plated Phos. Bronze
Connector 1 Mount Method	None
Connector 1 Hex Size, in./mm	1.26/32
Connector 2 Type	SMA
Connector 2 Gender	Male
Connector 2 inner conductor/plating material	Silver plated Phos. Bronze
Connector 2 Body Plating Material	Silver plated Phos. Bronze
Connector 2 Mount Method	None
Connector 2 Hex Size, in./mm	0.31/8
Body Style	Straight
Start Frequency (GHz)	DC
Stop Frequency (GHz)	6
Maximum Insertion Loss (dB)	0.5
Passive Intermodulation (dBc)	LT -160
Impedance (Ohms)	50
Max. VSWR	1.20:1
Max. Operating Volts	500
Operating temp, ° C	-65° to +125°
Length in.[mm]	1.31" [33.2]
Width in.[mm]	1.140" [29.0]
Weight, oz., [grams]	2.0, [56.68]
Dielectric Type	PTFE
Torque, in. lbs.	12
RoHS Compliant	Yes
REACH Compliant	Yes

© 2013 P1dB, Ltd. All rights reserved | www.p1db.com/adapters

P1LP-ADP-716J/SMAP

7/16 Female to SMA Male, DC-6 GHz Low PIM Adapter

Mechanical Outline Drawing

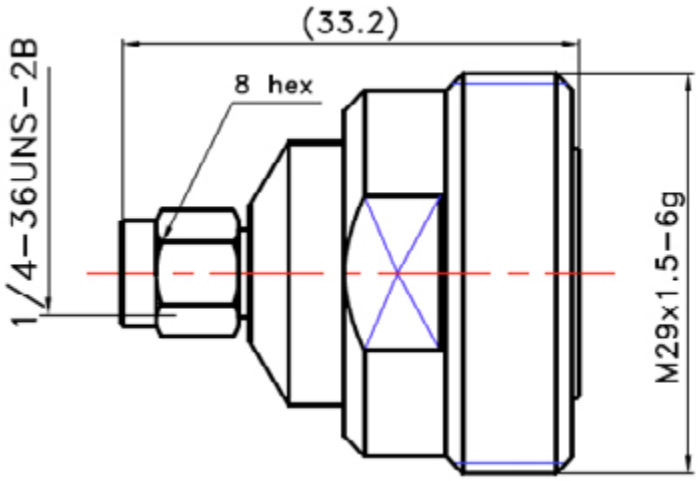

Dimensions in millimeters

P1dB, Ltd.
188 Martinvale Ave
San Jose, CA 95119
(408) 414-1450 ph
(408) 414-1461 fax
sales@p1dB.com

Scan this QR code with your smartphone

P1LP-ADP-716P/716P

7/16 Male to 7/16 Male, DC-6 GHz Low PIM Adapter

Description

7/16 Male to 7/16 Male, DC-6 GHz Low PIM Adapter. Each adapter has a passivated stainless steel body with silver plated phosphorus bronze center conductors. No soldering or crimping is required.



Specifications

Connector 1 Type	7/16
Connector 1 Gender	Male
Connector 1 inner conductor/plating material	Silver plated Phos. Bronze
Connector 1 Body Plating Material	Silver plated Phos. Bronze
Connector 1 Mount Method	None
Connector 1 Hex Size, in./mm	1.26/32
Connector 2 Type	7/16
Connector 2 Gender	Male
Connector 2 inner conductor/plating material	Silver plated Phos. Bronze
Connector 2 Body Plating Material	Silver/Trimetal plated Brass
Connector 2 Mount Method	None
Connector 2 Hex Size, in./mm	1.26/32
Body Style	Straight
Start Frequency (GHz)	DC
Stop Frequency (GHz)	6
Maximum Insertion Loss (dB)	0.5
Passive Intermodulation (dBc)	LT -168
Impedance (Ohms)	50
Max. VSWR	1.20:1
Max. Operating Volts	500
Operating temp, ° C	-65° to +125°
Length in.[mm]	1.62" [41.2]
Width in.[mm]	1.140" [29.0]
Weight, oz., [grams]	2.0, [56.68]
Dielectric Type	PTFE
Torque, in. lbs.	12
RoHS Compliant	Yes
REACH Compliant	Yes

© 2013 P1dB, Ltd. All rights reserved | www.p1db.com/adapters

P1LP-ADP-716P/716P

7/16 Male to 7/16 Male, DC-6 GHz Low PIM Adapter

Mechanical Outline Drawing

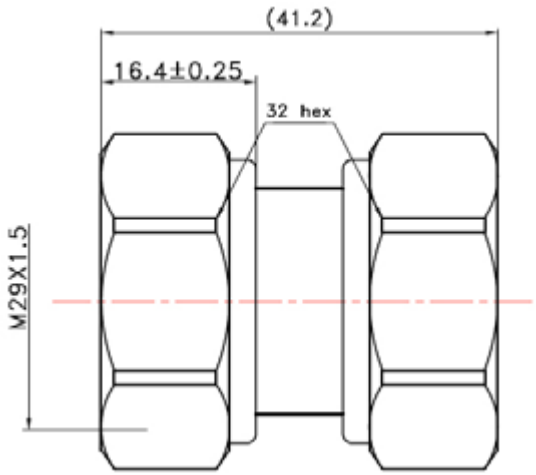

Dimensions in millimeters

P1dB, Ltd.
188 Martinvale Ave
San Jose, CA 95119
(408) 414-1450 ph
(408) 414-1461 fax
sales@p1dB.com

Scan this QR code with your smartphone

P1LP-ADP-716P/NJ

7/16 Male to N-type Female, DC-6 GHz Low PIM Adapter

Description

7/16 Male to N-type Female, DC-6 GHz Low PIM Adapter. Each adapter has a passivated stainless steel body with silver plated phosphorus bronze center conductors. No soldering or crimping is required.



Specifications

Connector 1 Type	7/16
Connector 1 Gender	Male
Connector 1 inner conductor/plating material	Silver plated Be-Cu
Connector 1 Body Plating Material	Silver plated Phos. Bronze
Connector 1 Mount Method	None
Connector 1 Hex Size, in./mm	1.26/32
Connector 2 Type	N-type
Connector 2 Gender	Female
Connector 2 inner conductor/plating material	Silver plated Phos. Bronze
Connector 2 Body Plating Material	Silver plated Phos. Bronze
Connector 2 Mount Method	None
Connector 2 Hex Size, in./mm	0.75/19
Body Style	Straight
Start Frequency (GHz)	DC
Stop Frequency (GHz)	6
Maximum Insertion Loss (dB)	0.5
Passive Intermodulation (dBc)	LT -168
Impedance (Ohms)	50
Max. VSWR	1.20:1
Max. Operating Volts	500
Operating temp, ° C	-65° to +125°
Length in.[mm]	1.42" [36.0]
Width in.[mm]	1.140" [29.0]
Weight, oz., [grams]	2.0, [56.68]
Dielectric Type	PTFE
Torque, in. lbs.	12
RoHS Compliant	Yes
REACH Compliant	Yes

© 2013 P1dB, Ltd. All rights reserved | www.p1db.com/adapters

P1LP-ADP-716P/NJ

7/16 Male to N-type Female, DC-6 GHz Low PIM Adapter

Mechanical Outline Drawing

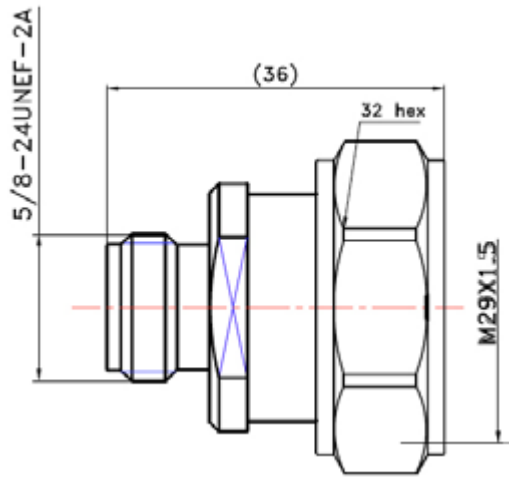

Dimensions in millimeters

P1dB, Ltd.
188 Martinvale Ave
San Jose, CA 95119
(408) 414-1450 ph
(408) 414-1461 fax
sales@p1dB.com

Scan this QR code with your smartphone

P1LP-ADP-716P/NP

7/16 Male to N-type Male, DC-6 GHz Low PIM Adapter

Description

7/16 Male to N-type Male, DC-6 GHz Low PIM Adapter. Each adapter has a passivated stainless steel body with silver plated phosphorus bronze center conductors. No soldering or crimping is required.



Specifications

Connector 1 Type	7/16
Connector 1 Gender	Male
Connector 1 inner conductor/plating material	Silver plated Phos. Bronze
Connector 1 Body Plating Material	Silver plated Phos. Bronze
Connector 1 Mount Method	None
Connector 1 Hex Size, in./mm	1.26/32
Connector 2 Type	N-type
Connector 2 Gender	Male
Connector 2 inner conductor/plating material	Silver plated Phos. Bronze
Connector 2 Body Plating Material	Silver/Trimetal plated Brass
Connector 2 Mount Method	None
Connector 2 Hex Size, in./mm	0.75/19
Body Style	Straight
Start Frequency (GHz)	DC
Stop Frequency (GHz)	6
Maximum Insertion Loss (dB)	0.5
Passive Intermodulation (dBc)	LT -168
Impedance (Ohms)	50
Max. VSWR	1.20:1
Max. Operating Volts	500
Operating temp, ° C	-65° to +125°
Length in.[mm]	1.70" [43.2]
Width in.[mm]	1.140" [29.0]
Weight, oz., [grams]	2.0, [56.68]
Dielectric Type	PTFE
Torque, in. lbs.	12
RoHS Compliant	Yes
REACH Compliant	Yes

© 2013 P1dB, Ltd. All rights reserved I www.p1db.com/adapters

P1LP-ADP-716P/NP

7/16 Male to N-type Male, DC-6 GHz Low PIM Adapter

Mechanical Outline Drawing

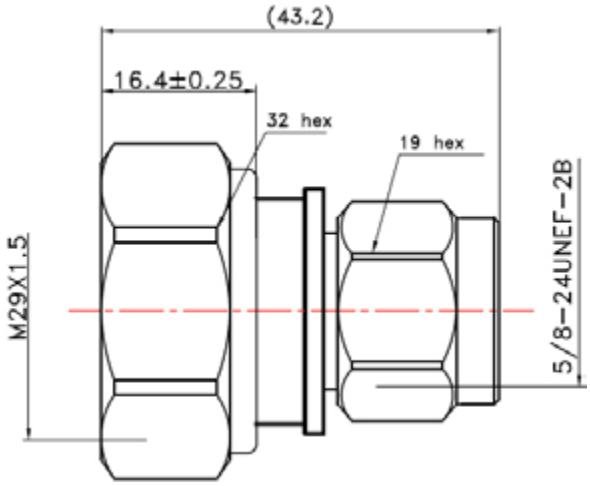

Dimensions in millimeters

P1dB, Ltd.
188 Martinvale Ave
San Jose, CA 95119
(408) 414-1450 ph
(408) 414-1461 fax
sales@p1dB.com

Scan this QR code with your smartphone

P1LP-ADP-716P/SMAJ

7/16 Male to SMA Female, DC-6 GHz Low PIM Adapter

Description

7/16 Male to SMA Female, DC-6 GHz Low PIM Adapter. Each adapter has a passivated stainless steel body with silver plated phosphorus bronze center conductors. No soldering or crimping is required.



Specifications

Connector 1 Type	7/16
Connector 1 Gender	Male
Connector 1 inner conductor/plating material	Silver plated Be-Cu
Connector 1 Body Plating Material	Silver plated Phos. Bronze
Connector 1 Mount Method	None
Connector 1 Hex Size, in./mm	1.26/32
Connector 2 Type	SMA
Connector 2 Gender	Female
Connector 2 inner conductor/plating material	Silver plated Phos. Bronze
Connector 2 Body Plating Material	Silver plated Phos. Bronze
Connector 2 Mount Method	None
Connector 2 Hex Size, in./mm	0.31/8
Body Style	Straight
Start Frequency (GHz)	DC
Stop Frequency (GHz)	6
Maximum Insertion Loss (dB)	0.5
Passive Intermodulation (dBc)	LT -160
Impedance (Ohms)	50
Max. VSWR	1.20:1
Max. Operating Volts	500
Operating temp, ° C	-65° to +125°
Length in.[mm]	1.25" [31.7]
Width in.[mm]	1.140" [29.0]
Weight, oz., [grams]	2.0, [56.68]
Dielectric Type	PTFE
Torque, in. lbs.	12
RoHS Compliant	Yes
REACH Compliant	Yes

© 2013 P1dB, Ltd. All rights reserved | www.p1db.com/adapters

P1LP-ADP-716P/SMAJ

7/16 Male to SMA Female, DC-6 GHz Low PIM Adapter

Mechanical Outline Drawing

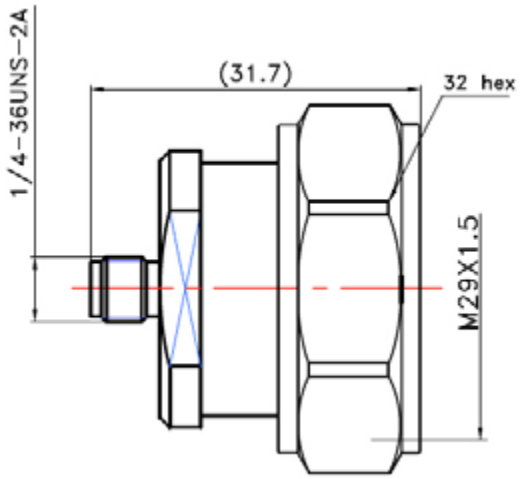

Dimensions in millimeters

P1dB, Ltd.
188 Martinvale Ave
San Jose, CA 95119
(408) 414-1450 ph
(408) 414-1461 fax
sales@p1dB.com

Scan this QR code with your smartphone

P1LP-ADP-716P/SMAP

7/16 Male to SMA Male, DC-6 GHz Low PIM Adapter

Description

7/16 Male to SMA Male, DC-6 GHz Low PIM Adapter. Each adapter has a passivated stainless steel body with silver plated phosphorus bronze center conductors. No soldering or crimping is required.

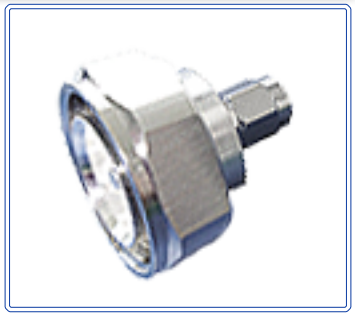

Specifications

Connector 1 Type	7/16
Connector 1 Gender	Male
Connector 1 inner conductor/plating material	Silver plated Be-Cu
Connector 1 Body Plating Material	Silver plated Phos. Bronze
Connector 1 Mount Method	None
Connector 1 Hex Size, in./mm	1.26/32
Connector 2 Type	SMA
Connector 2 Gender	Male
Connector 2 inner conductor/plating material	Silver plated Phos. Bronze
Connector 2 Body Plating Material	Silver plated Phos. Bronze
Connector 2 Mount Method	None
Connector 2 Hex Size, in./mm	0.31/8
Body Style	Straight
Start Frequency (GHz)	DC
Stop Frequency (GHz)	6
Maximum Insertion Loss (dB)	0.5
Passive Intermodulation (dBc)	LT -160
Impedance (Ohms)	50
Max. VSWR	1.20:1
Max. Operating Volts	500
Operating temp, ° C	-65° to +125°
Length in.[mm]	1.35” [34.4]
Width in.[mm]	1.140” [29.0]
Weight, oz., [grams]	2.0, [56.68]
Dielectric Type	PTFE
Torque, in. lbs.	12
RoHS Compliant	Yes
REACH Compliant	Yes

© 2013 P1dB, Ltd. All rights reserved | www.p1db.com/adapters

P1LP-ADP-716P/SMAP

7/16 Male to SMA Male, DC-6 GHz Low PIM Adapter

Mechanical Outline Drawing

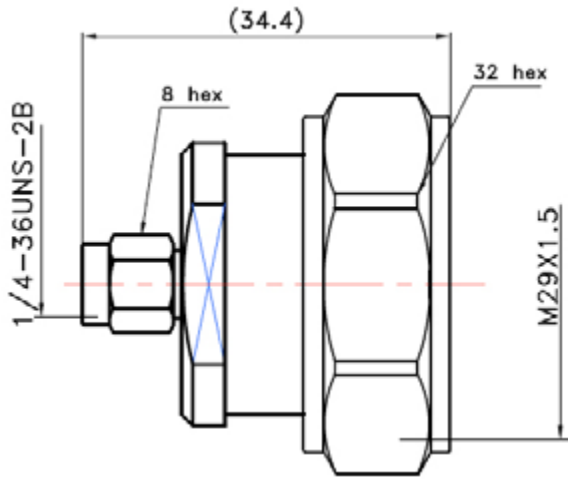

Dimensions in millimeters

P1dB, Ltd.
188 Martinvale Ave
San Jose, CA 95119
(408) 414-1450 ph
(408) 414-1461 fax
sales@p1dB.com

Scan this QR code with your smartphone

P1LP-ADP-NJ/NJ

N-type Female to N-type Female, DC-6 GHz Low PIM Adapter

Description

N-type Female to N-type Female, DC-6 GHz Low PIM Adapter. Each adapter has a passivated stainless steel body with silver plated phosphorus bronze center conductors. No soldering or crimping is required.



Specifications

Connector 1 Type	N-type
Connector 1 Gender	Female
Connector 1 inner conductor/plating material	Silver plated Be-Cu
Connector 1 Body Plating Material	Silver plated Phos. Bronze
Connector 1 Mount Method	None
Connector 1 Hex Size, in./mm	0.75/19
Connector 2 Type	N-type
Connector 2 Gender	Female
Connector 2 inner conductor/plating material	Silver plated Phos. Bronze
Connector 2 Body Plating Material	Silver plated Phos. Bronze
Connector 2 Mount Method	None
Connector 2 Hex Size, in./mm	0.75/19
Body Style	Straight
Start Frequency (GHz)	DC
Stop Frequency (GHz)	6
Maximum Insertion Loss (dB)	0.5
Passive Intermodulation (dBc)	LT -160
Impedance (Ohms)	50
Max. VSWR	1.20:1
Max. Operating Volts	500
Operating temp, ° C	-65° to +125°
Length in.[mm]	1.74" [44.2]
Width in.[mm]	1.140" [29.0]
Weight, oz., [grams]	2.0, [56.68]
Dielectric Type	PTFE
Torque, in. lbs.	12
RoHS Compliant	Yes
REACH Compliant	Yes

© 2013 P1dB, Ltd. All rights reserved | www.p1db.com/adapters

P1LP-ADP-NJ/NJ

N-type Female to N-type Female, DC-6 GHz Low PIM Adapter

Mechanical Outline Drawing

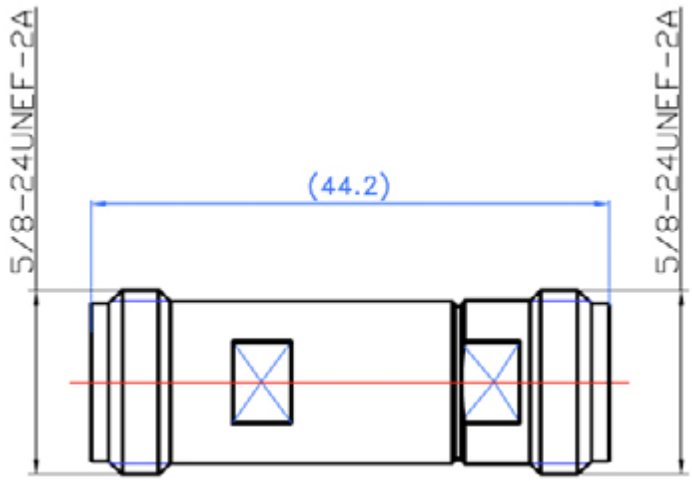

Dimensions in millimeters

P1dB, Ltd.
188 Martinvale Ave
San Jose, CA 95119
(408) 414-1450 ph
(408) 414-1461 fax
sales@p1dB.com

Scan this QR code with your smartphone

P1LP-ADP-NP/NJ

N-type Male to N-type Female, DC-6 GHz Low PIM Adapter

Description

N-type Male to N-type Female, DC-6 GHz Low PIM Adapter. Each adapter has a passivated stainless steel body with silver plated phosphorus bronze center conductors. No soldering or crimping is required.



Specifications

Connector 1 Type	N-type
Connector 1 Gender	Male
Connector 1 inner conductor/plating material	Silver plated Be-Cu
Connector 1 Body Plating Material	Silver plated Phos. Bronze
Connector 1 Mount Method	None
Connector 1 Hex Size, in./mm	0.75/19
Connector 2 Type	N-type
Connector 2 Gender	Female
Connector 2 inner conductor/plating material	Silver plated Phos. Bronze
Connector 2 Body Plating Material	Silver plated Phos. Bronze
Connector 2 Mount Method	None
Connector 2 Hex Size, in./mm	0.75/19
Body Style	Straight
Start Frequency (GHz)	DC
Stop Frequency (GHz)	6
Maximum Insertion Loss (dB)	0.5
Passive Intermodulation (dBc)	LT -160
Impedance (Ohms)	50
Max. VSWR	1.20:1
Max. Operating Volts	500
Operating temp, ° C	-65° to +125°
Length in.[mm]	1.53" [38.9]
Width in.[mm]	1.140" [29.0]
Weight, oz., [grams]	2.0, [56.68]
Dielectric Type	PTFE
Torque, in. lbs.	12
RoHS Compliant	Yes
REACH Compliant	Yes

© 2013 P1dB, Ltd. All rights reserved | www.p1db.com/adapters

P1LP-ADP-NP/NJ

N-type Male to N-type Female, DC-6 GHz Low PIM Adapter

Mechanical Outline Drawing

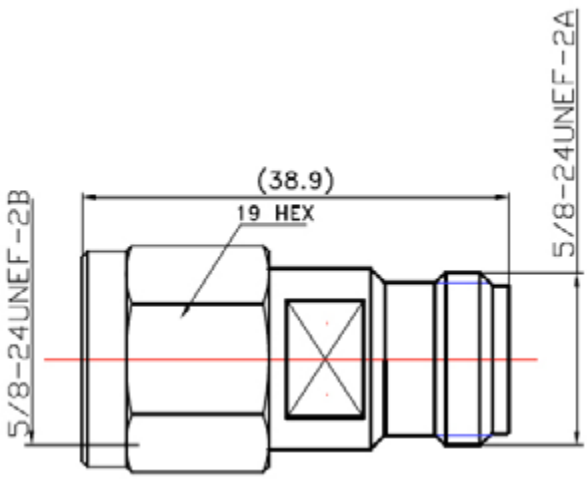

Dimensions in millimeters

P1dB, Ltd.
188 Martinvale Ave
San Jose, CA 95119
(408) 414-1450 ph
(408) 414-1461 fax
sales@p1dB.com

Scan this QR code with your smartphone

P1LP-ADP-NP/NP

N-type Male to N-type Male, DC-6 GHz Low PIM Adapter

Description

N-type Male to N-type Male, DC-6 GHz Low PIM Adapter. Each adapter has a passivated stainless steel body with silver plated phosphorus bronze center conductors. No soldering or crimping is required.

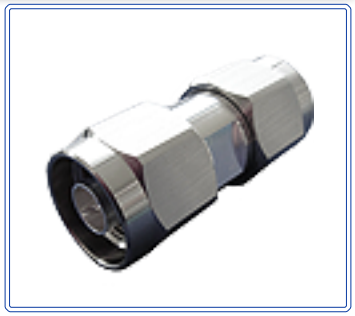

Specifications

Connector 1 Type	N-type
Connector 1 Gender	Male
Connector 1 inner conductor/plating material	Silver plated Be-Cu
Connector 1 Body Plating Material	Silver plated Phos. Bronze
Connector 1 Mount Method	None
Connector 1 Hex Size, in./mm	0.75/19
Connector 2 Type	N-type
Connector 2 Gender	Male
Connector 2 inner conductor/plating material	Silver plated Phos. Bronze
Connector 2 Body Plating Material	Silver plated Phos. Bronze
Connector 2 Mount Method	None
Connector 2 Hex Size, in./mm	0.75/19
Body Style	Straight
Start Frequency (GHz)	DC
Stop Frequency (GHz)	6
Maximum Insertion Loss (dB)	0.5
Passive Intermodulation (dBc)	LT -160
Impedance (Ohms)	50
Max. VSWR	1.20:1
Max. Operating Volts	500
Operating temp, ° C	-65° to +125°
Length in.[mm]	1.76" [44.6]
Width in.[mm]	1.140" [29.0]
Weight, oz., [grams]	2.0, [56.68]
Dielectric Type	PTFE
Torque, in. lbs.	12
RoHS Compliant	Yes
REACH Compliant	Yes

© 2013 P1dB, Ltd. All rights reserved | www.p1db.com/adapters

P1LP-ADP-NP/NP

N-type Male to N-type Male, DC-6 GHz Low PIM Adapter

Mechanical Outline Drawing

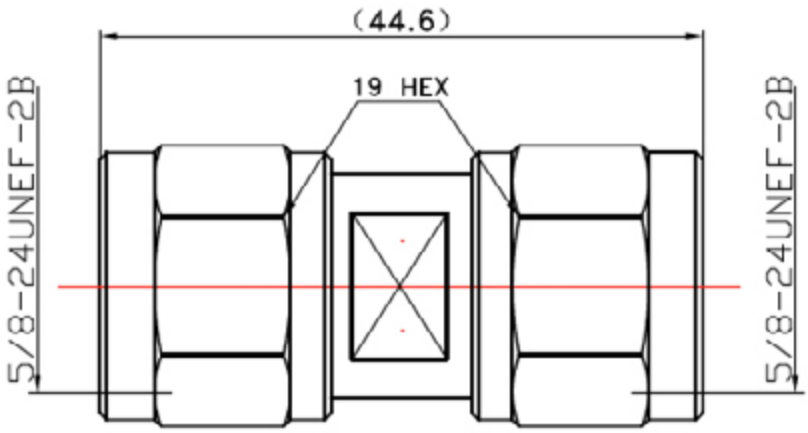

Dimensions in millimeters

P1dB, Ltd.
188 Martinvale Ave
San Jose, CA 95119
(408) 414-1450 ph
(408) 414-1461 fax
sales@p1dB.com

Scan this QR code with your smartphone